Ultrasonic proximity sensors with analog output

UNDK 30I6113/S14

dimension drawing

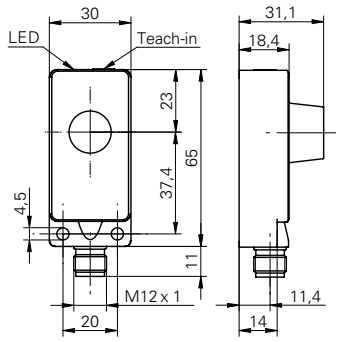

general data

sensing range sd	30 ... 250 mm
scanning range close limit Sdc	30 ... 250 mm
scanning range far limit Sde	30 ... 250 mm
repeatability	< 0,5 mm
resolution	< 0,3 mm
adjustment	Teach-in
sonic frequency	300 kHz
response time ton	< 50 ms
release time toff	< 50 ms
alignment aid	target display flashing
light indicator	yellow LED / red LED
temperature drift	< 2 % of distance to target So

electrical data

voltage supply range +Vs	15 ... 30 VDC
current consumption max.	55 mA
output circuit	current output
output signal	4 ... 20 mA / 20 ... 4 mA
output current	< 20 mA
load resistance +Vs max.	< 1100 Ohm
load resistance +Vs min.	< 400 Ohm
residual ripple	< 10 % Vs
short circuit protection	yes
reverse polarity protection	yes

mechanical data

type	rectangular
housing material	polyester / die-cast zinc
width / diameter	30 mm
height / length	65 mm
depth	31 mm
connection types	connector M12

ambient conditions

operating temperature	-10 ... +60 °C
protection class	IP 67

photo

connection diagram

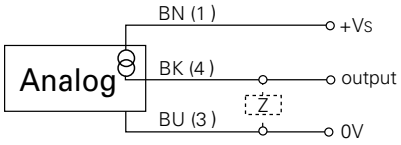

- Analog current output 4-20 mA
- small blind range