OADK 25U7480/S14C

Distance sensors

Article number: 11080143

Overview

- PLEASE NOTE:
- PRODUCT NOT FOR NEW PROJECTS

Picture similar

Technical data

General data	
Measuring distance Sd	100 … 1000 mm
Beam diameter	3.7 … 13 mm
Adjustment	Teach-in
Teach-in range min.	> 50 mm
Power on indication	LED green
Soiled lens indicator	LED red
Resolution	300 … 4000 µm
Linearity error	± 1.1 … 15 mm
Beam type	Point
Interference suppression	< 32 ms
Light Source	
Light source	Pulsed red laser diode
Wave length	656 nm
Laser class	1
Electrical data	
Response time / release time	< 12.8 ms
Voltage supply range +Vs	12 … 30 VDC
Current consumption max. (no load)	80 mA

Electrical data	
Output circuit	Analog
Output signal	0 ... 10 VDC
Load resistance (analog U)	> 100 kOhm
Output current	< 100 mA
Alarm output	Push-pull
Short circuit protection	Yes
Reverse polarity protection	Yes, Vs to GND
Mechanical data	
Width / diameter	23.4 mm
Height / length	63 mm
Depth	45 mm
Type	Rectangular
Housing material	Plastic (SAN LURAN 378P)
Front (optics)	PMMA
Connection types	Connector M12 5 pin
Ambient conditions	
Ambient light immunity	< 20 kLux
Protection class	IP 67
Operating temperature	0 … +50 °C

Remarks

- qTeach

2022-11-10 EN/20170206 Design and specifications subject to change without notice

OADK 25U7480/S14C

Distance sensors

Article number: 11080143

Dimension drawing

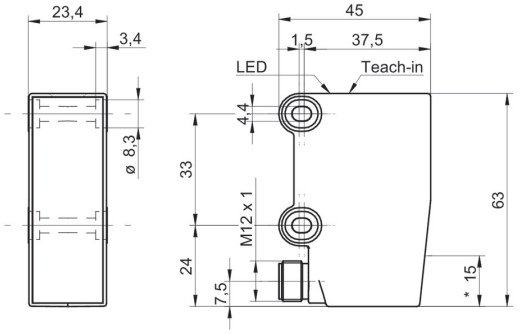

- * emitter axis

Linearity error

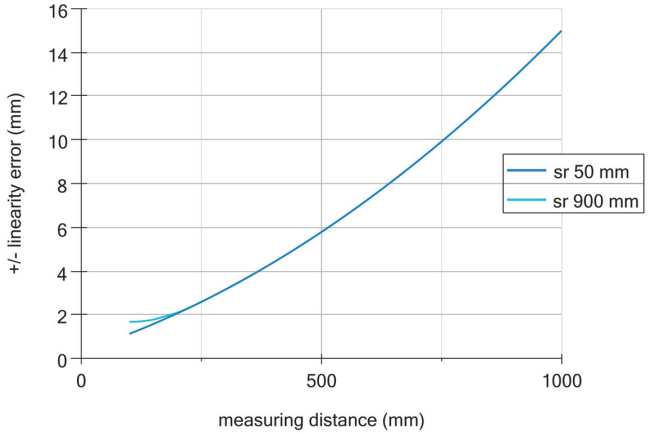

Laser warning

CLASS 1 LASER PRODUCT

IEC 60825-1/2014
Complies with 21 CFR 1040.10 and 1040.11 except for conformance with IEC 60825-1 Ed. 3., as described in Laser Notice No. 56, dated May 8, 2019

Connection diagram

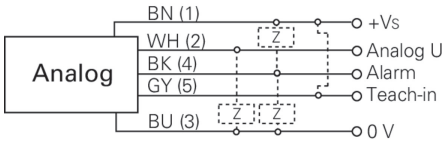

Resolution

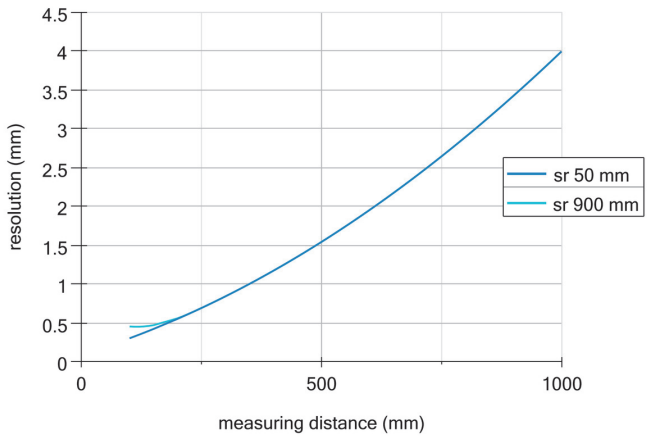

2022-11-10 EN/20170206 Design and specifications subject to change without notice